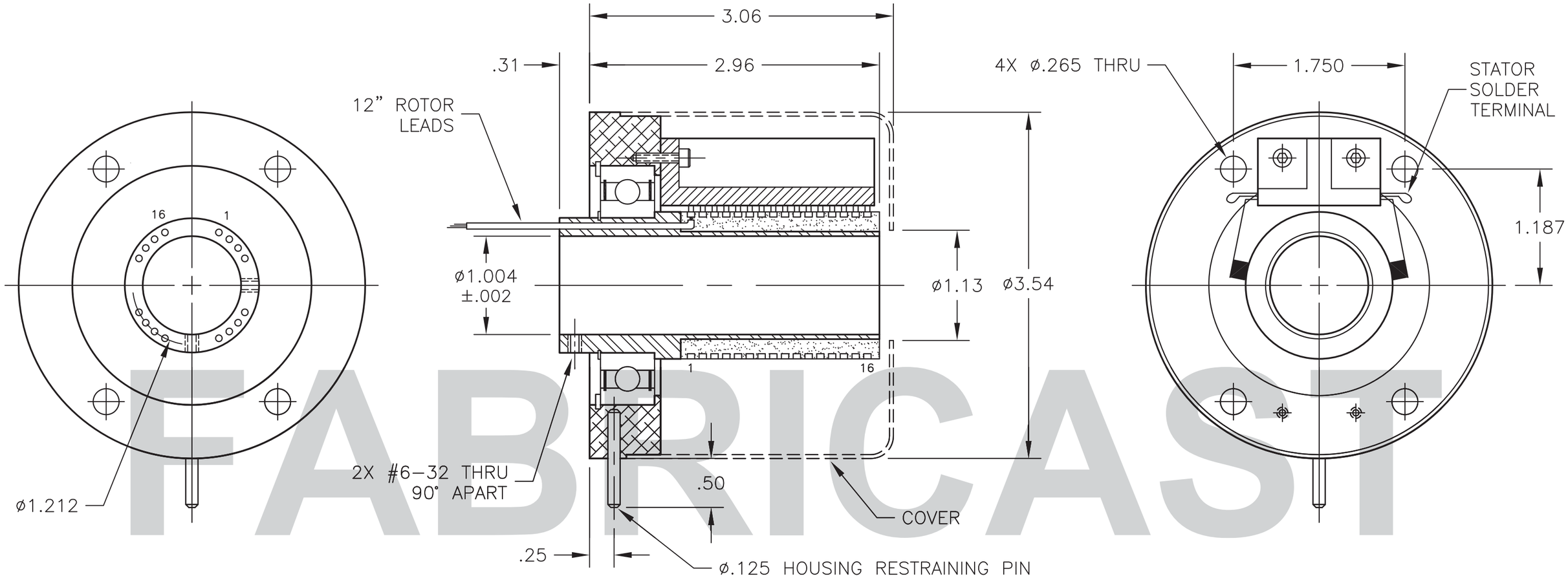

FABRICAST

ROTOR LEAD COLOR CODE			
RING NO.	WIRE COLOR	RING NO.	WIRE COLOR
1	GREEN	9	VIOLET
2	WHITE	10	GRAY
3	BLUE	11	GRN/WHT
4	BLACK	12	WHT/BLK
5	BROWN	13	BLU/WHT
6	RED	14	BLK/WHT
7	ORANGE	15	BRN/WHT
8	YELLOW	16	RED/WHT

Fabricast Inc. claims proprietary rights to the material disclosed hereon. This drawing and/or information is used in confidence for engineering information only and may not be reproduced or used to manufacture anything shown or referred to hereon without direct written permission from Fabricast Inc. to the user.

MANUFACTURING STANDARDS
UNLESS OTHERWISE SPECIFIED

TOLERANCES
.X = ±.1 .XXX = ±.010
.XX = ±.03 ANGULAR = ±0°30'

DRAWN WPJ 11-15-16

APPROVED

FABRICAST, INC.
2511 SEAMAN AVE.
SO. EL MONTE, CA, USA 91733
TEL 626.443.3247
INFO@FABRICAST.COM
WWW.FABRICAST.COM

TYPE 19816

SIZE	CODE IDENT. NO.	DWG	REV
B	13345	19816	

SCALE

SHEET 1 OF 1